1 -Comp. Loc.: Grounds

- ⇒ "1.1 Vehicle Front", page 1
- ⇒ "1.2 Vehicle Cabin", page 3

1.1 Vehicle Front

1 - Ground strap, battery to body, sedan ⇒ page 1

1 - Ground strap, battery to body, wagon ⇒ page 2

6 - Ground strap, engine to generator ⇒ page 2

13 - Ground connection in engine compartment, right ⇒ page 2

16 - Ground connection 1 on valve cover - for engine code AZX ⇒ page 3

16 - Ground connection 1 on valve cover - for engine code AWT ⇒ page 3

28 - Ground connection on firewall ⇒ page 3

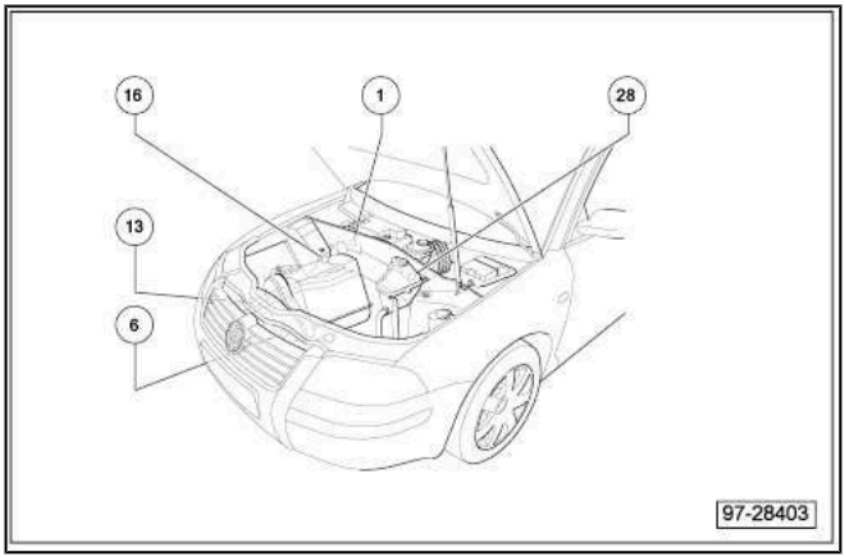

1.1.1 1 Ground strap, sedan

1 - Ground strap, battery to body, sedan

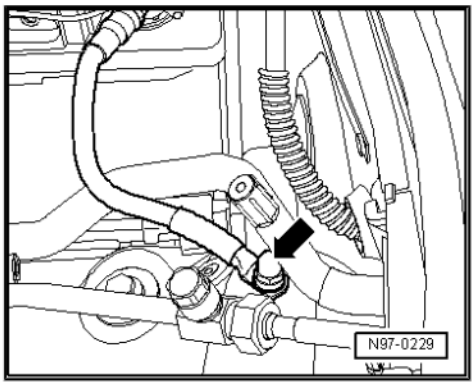

Protected by copyright. Copying for private or commercial purposes, in part or in whole, is not permitted unless authorised by Volkswagen AG. Volkswagen AG does not guarantee or accept any liability with respect to the correctness of information in this document. Copyright by Volkswagen AG.

1.1.2 1 Ground strap, wagon

1 - Ground strap, battery to body, wagon

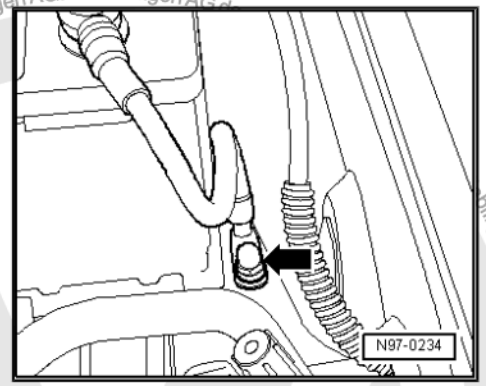

1.1.3 6 Ground strap

6 - Ground strap, engine to generator

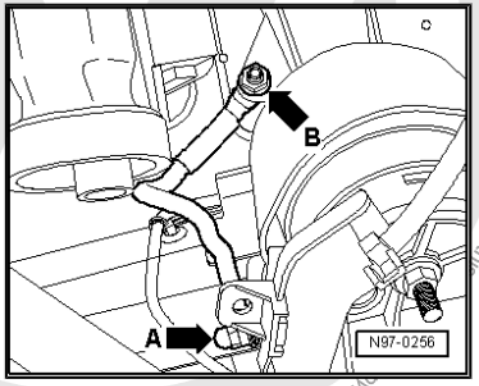

1.1.4 13 Ground connection

13 - Ground connection in engine compartment, right

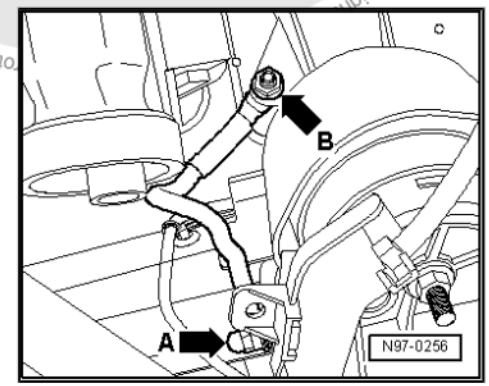

Protected by copyright. Copying for private or commercial purposes, in part or in whole, is not permitted unless authorised by Volkswagen AG. Volkswagen AG d
bility with respect to the correctness of information in th

1.1.5 16 Ground connection 1

16 - Ground connection 1 on valve cover - for engine code AZX

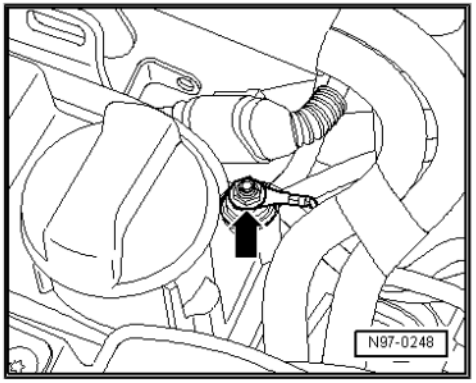

1.1.6 16 Ground connection 1

16 - Ground connection 1 on valve cover - for engine code AWT

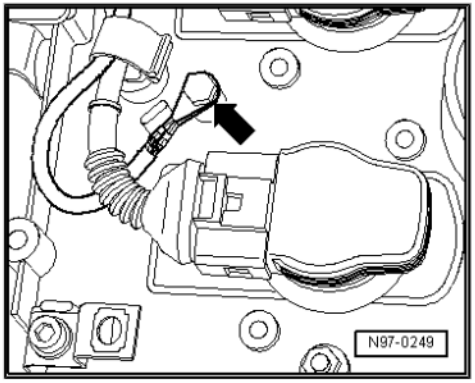

1.1.7 28 Ground connection

28 - Ground connection on firewall

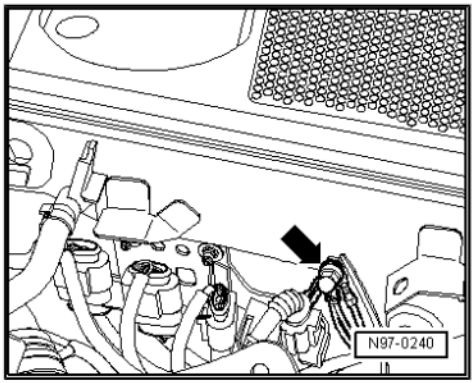

1.2 Vehicle Cabin

Protected by copyright. Copyright by Volkswagen AG. Copying for private or commercial purposes, in part or in whole, is not permitted unless authorised by Volkswagen AG. Volkswagen AG does not guarantee or accept any liability with respect to the correctness of information in this document.

30 - Ground connection 1 next to fuse/relay panel ⇒ page 4

41 - Ground connection under rear shelf ⇒ page 5

43 - Ground connection on A-pillar, lower right ⇒ page 5

44 - Ground connection on A-pillar, lower left ⇒ page 5

77 - Ground connection on B-pillar, lower left ⇒ page 6

78 - Ground connection on B-pillar, lower right ⇒ page 6

610 - Audio ground connection under front center console ⇒ page 6

616 - Luggage compartment lamp ground connection ⇒ page 7

617 - Ground connection 2 on A-pillar, lower right ⇒ page 7

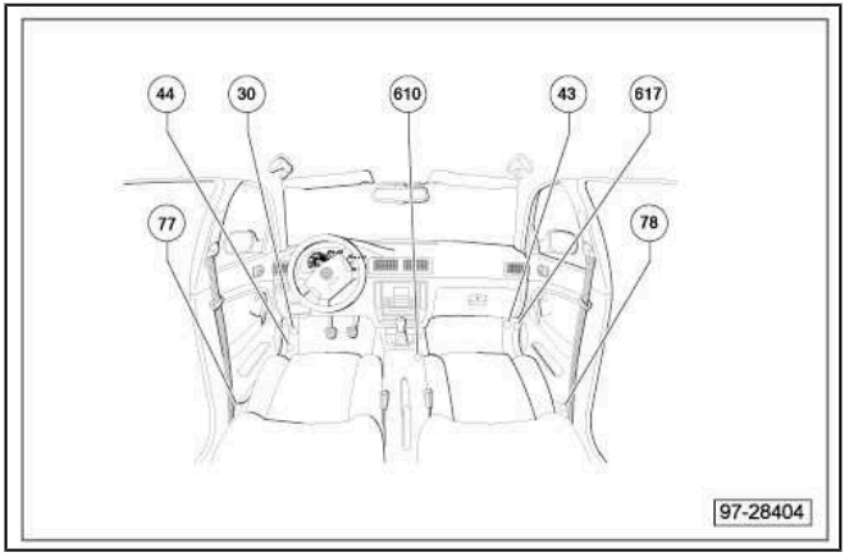

Protected by copyright. Copying for private or commercial purposes, in part or in whole, is not permitted unless authorised by Volkswagen AG. Volkswagen AG does not guarantee or accept any liability with respect to the correctness of information in this document. Copyright by Volkswagen AG.

1.2.1 30 Ground connection 1

30 - Ground connection 1 next to fuse/relay panel

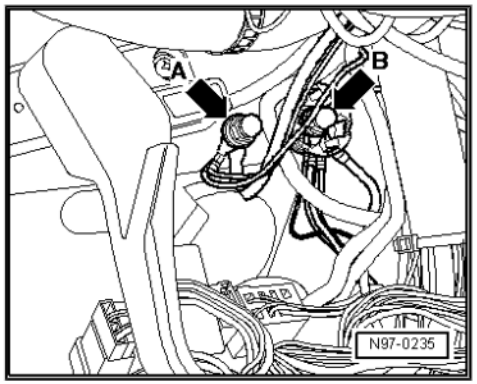

1.2.2 41 Ground connection

41 - Ground connection under rear shelf

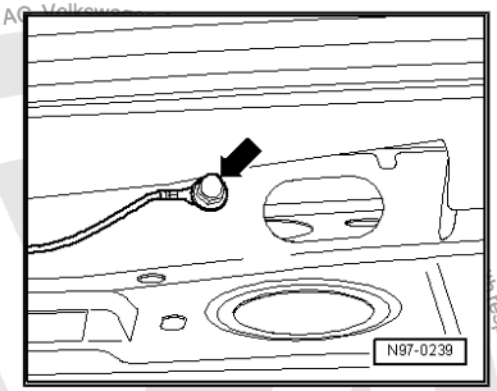

1.2.3 43 Ground connection

43 - Ground connection on A-pillar, lower right

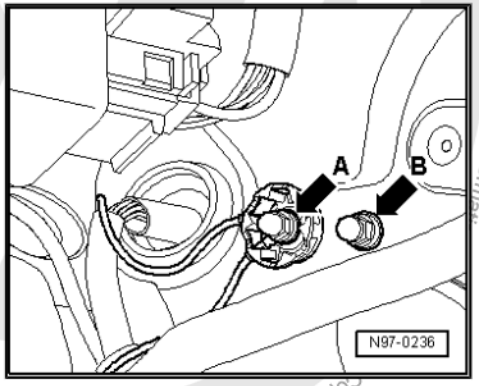

1.2.4 44 Ground connection

44 - Ground connection on A-pillar, lower left

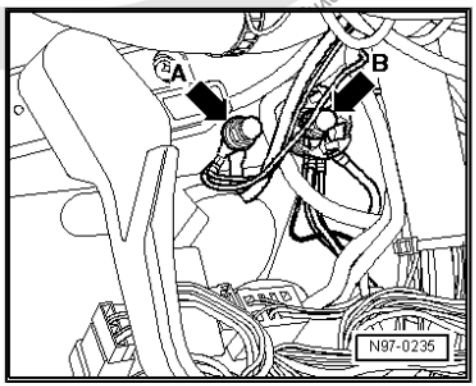

Protected by copyright. Copying for private or commercial purposes, in part or in whole, is not permitted unless authorised by Volkswagen AG. Volkswagen

1.2.5 77 Ground connection

77 - Ground connection on B-pillar, lower left

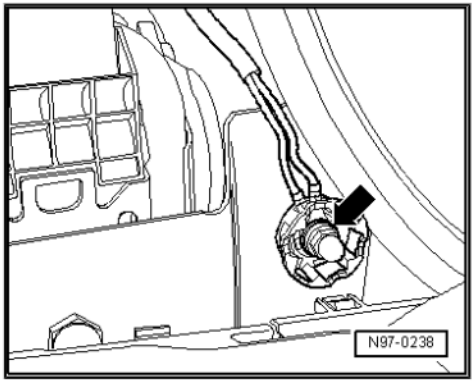

1.2.6 78 Ground connection

78 - Ground connection on B-pillar, lower right

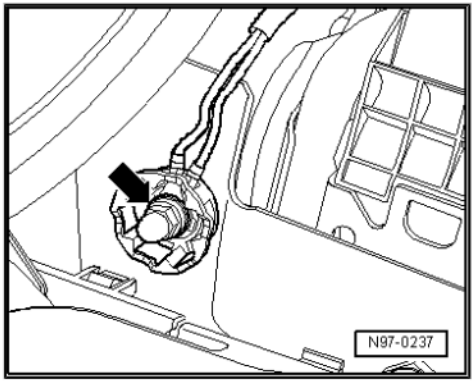

1.2.7 610 Audio ground connection

610 - Audio ground connection under front center console

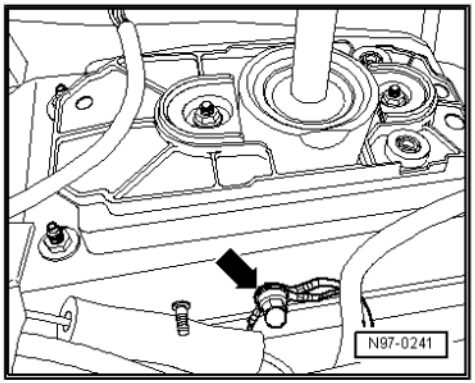

Protected by copyright. Copying for private or commercial purposes, in part or in whole, is not permitted unless authorised by Volkswagen AG. Volkswagen AG does not guarantee or accept any liability with respect to the correctness of information in this document. Copyright by Volkswagen AG.

1.2.8 616 Ground connection

616 - Luggage compartment lamp ground connection

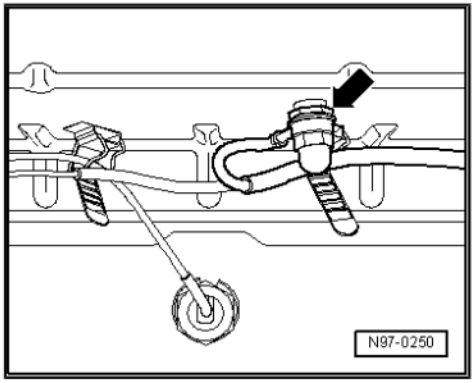

1.2.9 617 Ground connection

617 - Ground connection 2 on A-pillar, lower right

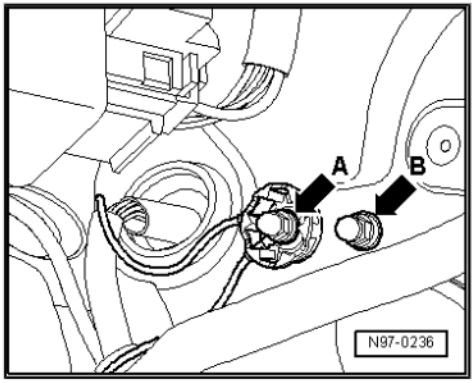

Protected by copyright. Copying for private or commercial purposes, in part or in whole, is not permitted unless authorised by Volkswagen AG. Volkswagen AG does not guarantee or accept any liability with respect to the correctness of information in this document. Copyright by Volkswagen AG.